Surface Leveling Plate

Product Numbers
- SLPBK

Hardware Pack: n/a

Required Tools
- ⅛" Drill Bit
- #2 Phillips Screwdriver and/or #2 Phillips Bit
- Cordless Drill/Driver

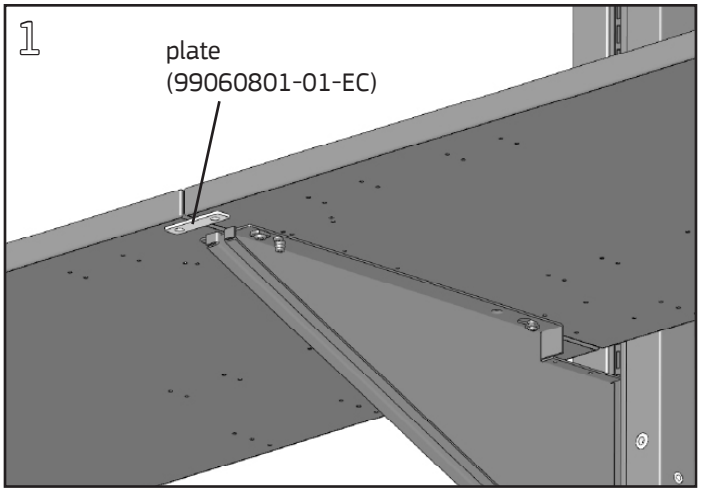

Install the work surfaces according to surface support instructions. Hold the Surface Leveling Plate on the underside of the work surfaces, centering it over the joint, with a setback of ¼" from the front edge of the work surface. Mark the hole locations for the plate.

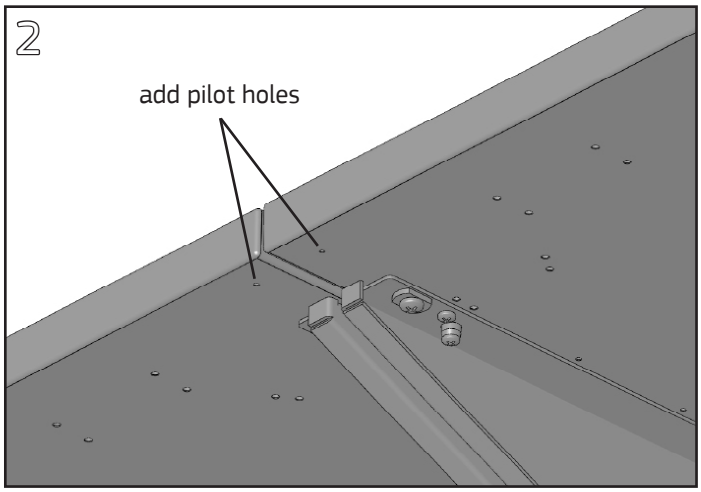

Using an **⅛" drill bit** and **cordless drill**, drill a pilot hole in each surface at the marked location. Do not drill holes deeper than 1".

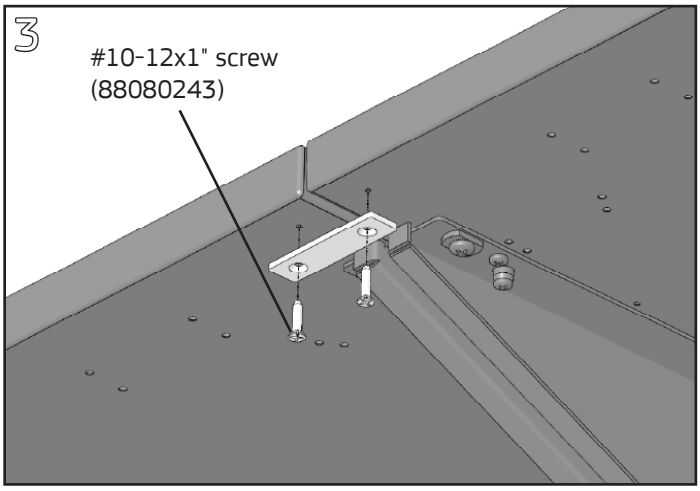

Fasten the plate through the pilot holes using two #10-12x1" Phillips flathead screws and a **#2 screwdriver/drill** with **bit**.