ErgoStat® Pro

BASES AND RISER FRAMES

Base

PRODUCT NUMBERS
PERGxxyy, PERCxxyy

HARDWARE PACK
PERHP (p/n 16032903-01)

REQUIRED TOOLS
Cordless Drill/Driver, 4mm Hex Bit or Allen wrench, #2 Phillips Bit and/or Screwdriver, ⅛" Drill Bit

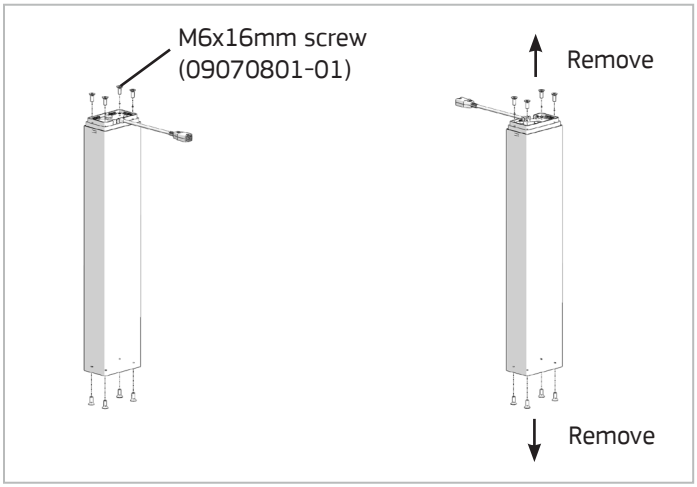

1. Remove the M6x16mm socket flat head screws from the top and bottom of each leg using a **4mm Allen wrench.**

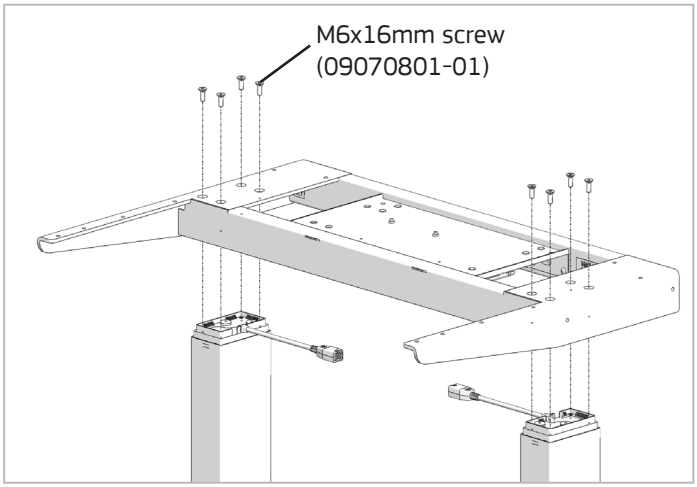

2. Place legs on the floor oriented with cables at top, space legs to match the width of the stretcher. Align countersunk holes in stretcher with tapped holes in the top of the legs. Install (4) M6x16mm socket flat head screws in each leg to secure the stretcher. Do not exceed a screw torque of 10 Nm (88.5 in.-lbs.).

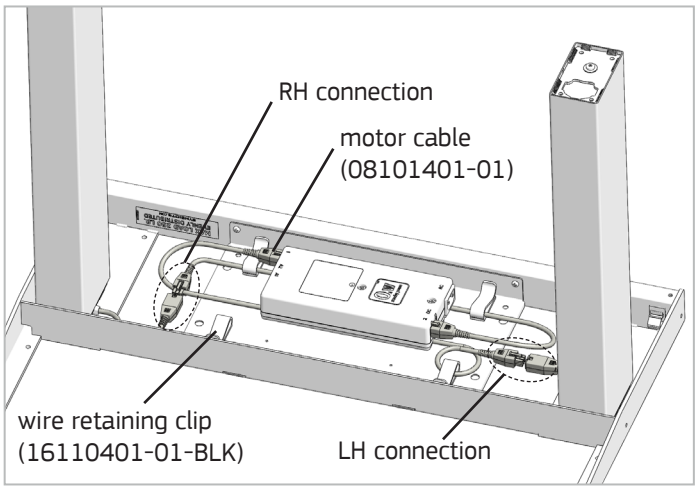

3. Flip unit upside down. Connect the leg cables to the motor cables that are preassembled to ports 1 and 2 of the control box. Manage excess cable length with wire retaining clips.

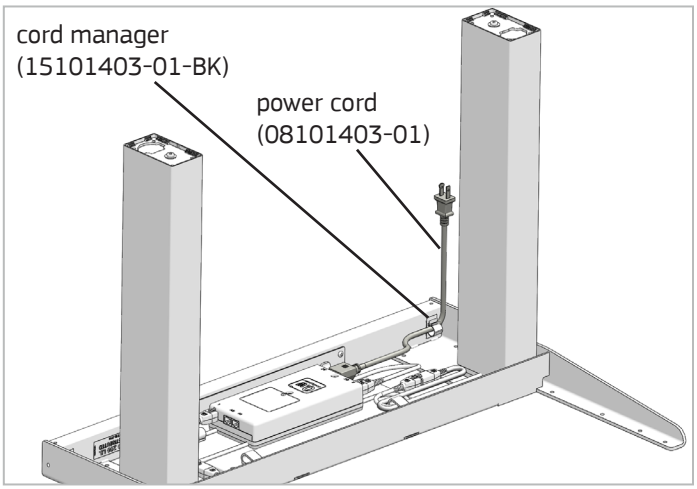

4. Attach the power cord to the port on the control box labeled "AC" and route the cord through the cord manager in the back corner of the stretcher.

BASES AND RISER FRAMES

Base, continued

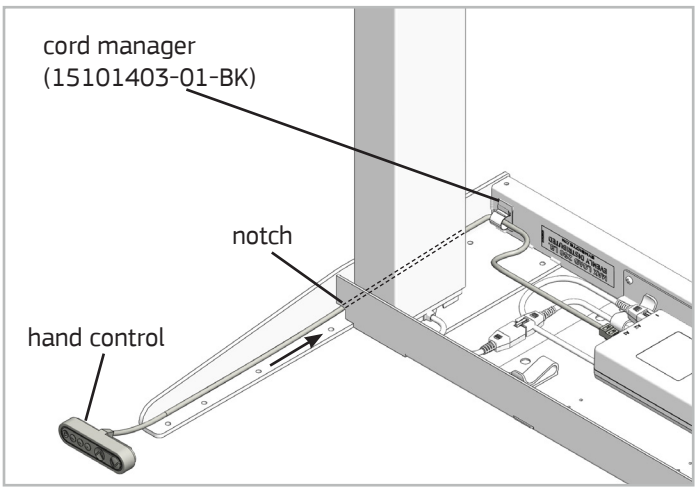

5. Route the end of the hand control cable through the front stretcher notch, along side the leg, and through the cord manager in the back corner of the stretcher. Plug the cable into the port labeled “A1”.

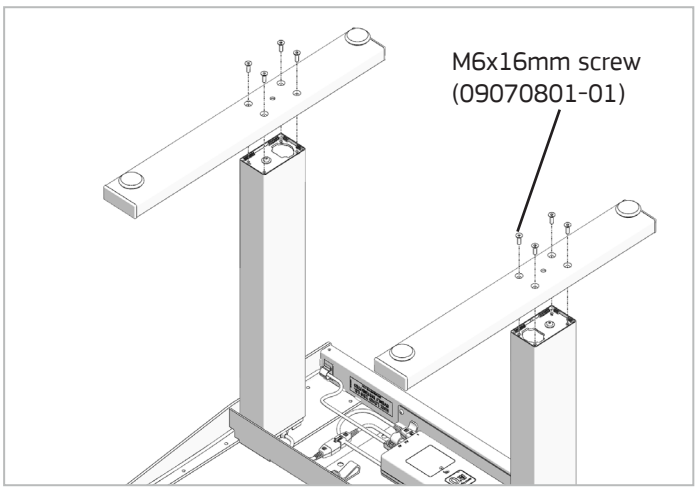

6. Attach each foot to the bottom of the leg with (4) M6x16mm socket flat head screws using a **4mm Allen wrench**. Do not exceed a screw torque of 10 Nm (88.5 in-lbs.). If applicable, attach casters. Install casters with brakes at front of base.

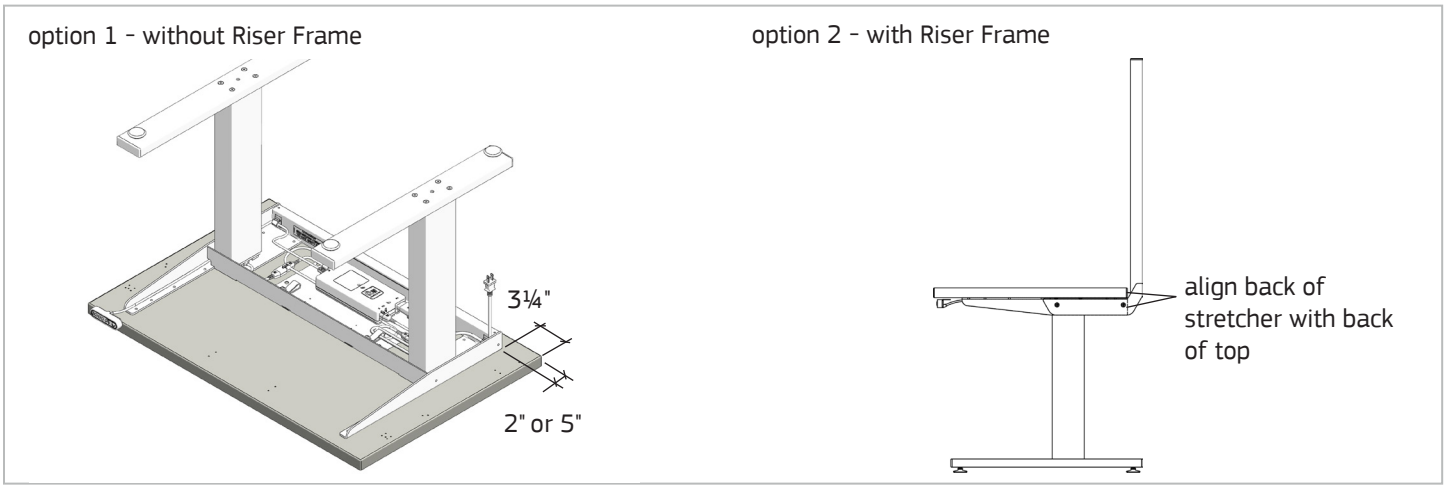

7. **Option 1**: If a Riser Frame **will not be attached to the base**, install the top (not included) with base upside down. Center the base over the width of the top and align the back of the base so the top rear overhang is 2" for a 24" or 30" deep top, or 5" for a 36" deep top. Drill ⅛" diameter x ½" deep pilot holes to align with the holes in the stretcher top supports as needed.

   Option 2: If a Riser Frame is to be **used with the base**, mount the frame first. Then position the top centered left to right with the back of the base aligned with the back of the top.

BASES AND RISER FRAMES

Base, continued

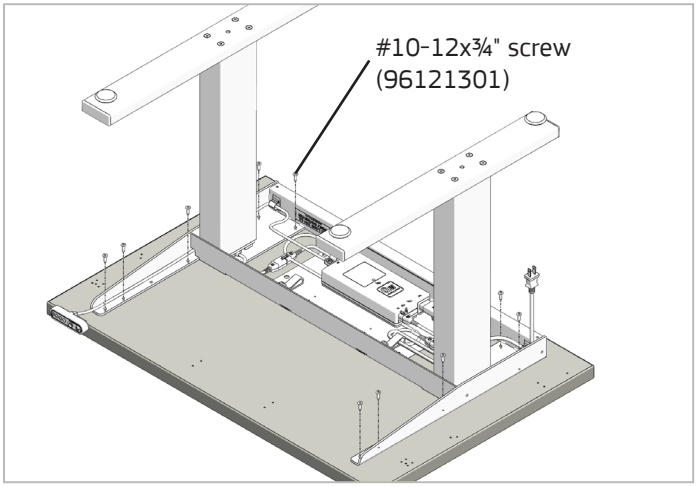

8. Attach top to the base with (5) #10-12x¾" Phillips pan head screws per side.

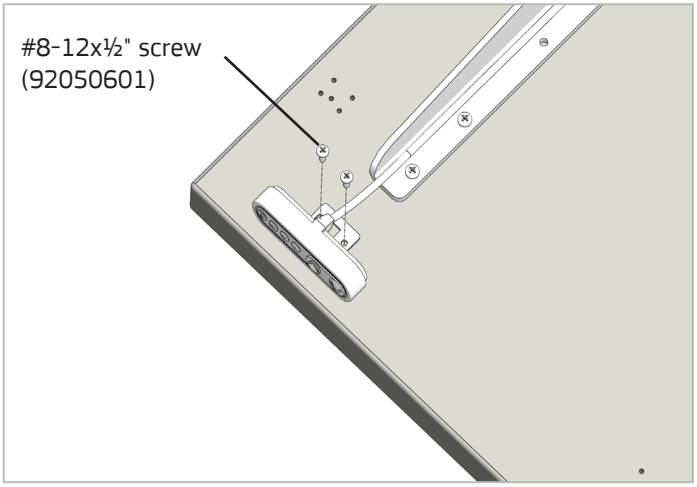

9. Secure the hand control with (2) #8-12x½" Phillips pan head screws.

10. Before using your ErgoStat Pro base, follow the steps below to initialize the table.
    - First, ensure there are no hanging components or obstacles underneath the worksurface that could be damaged when lowering the table to its lowest position.
    - Press and hold the down button on the control switch until the table comes to a complete stop in its lowest position.
    - Release the down button. Wait 2-3 seconds and press the down button once again.
    - Release the down button. The table should now be initialized and work as expected.